Hoffman|Controls
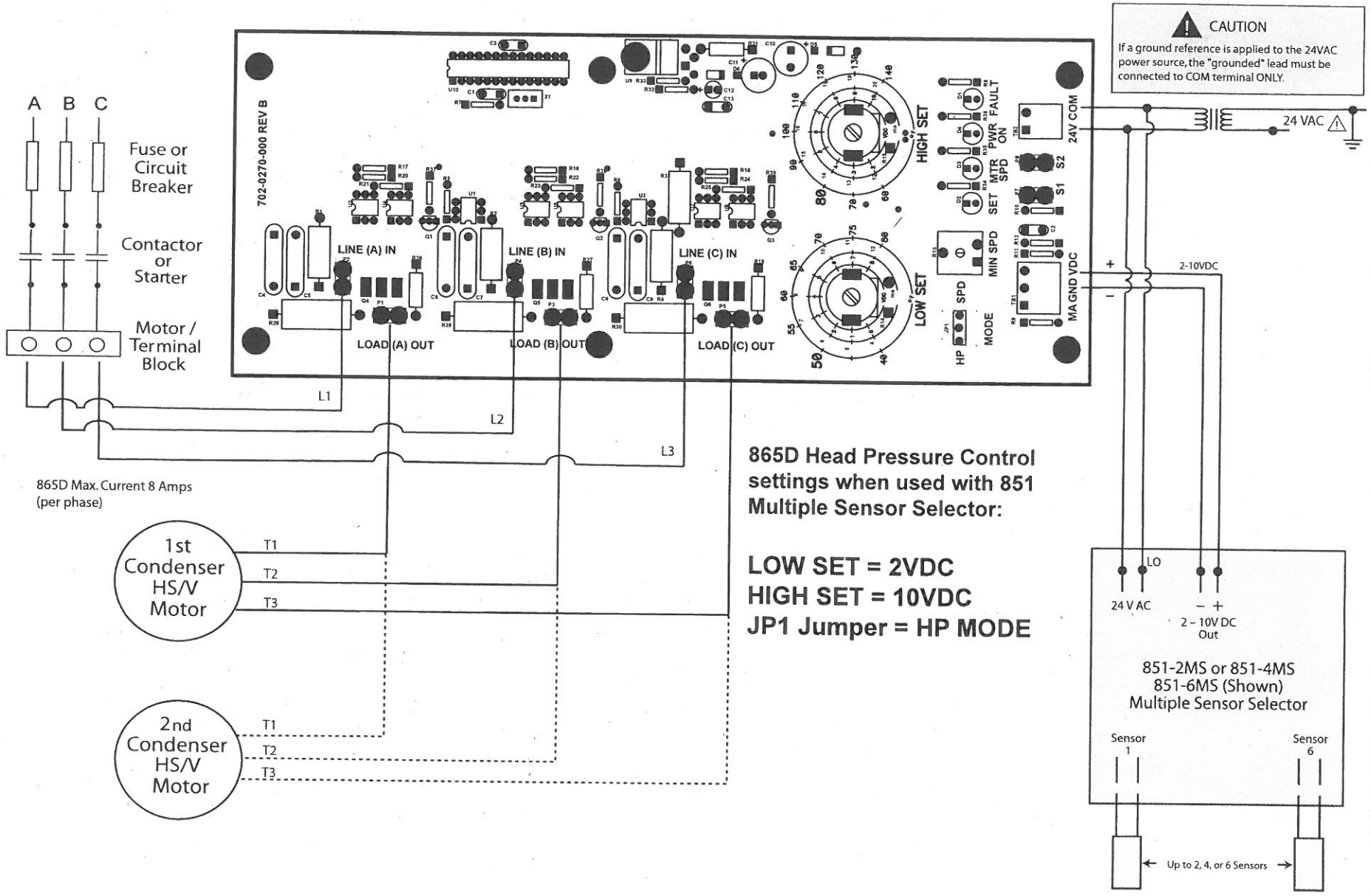
865D/851-MS Combination Wiring Diagram